EVW003

Female cordset

ADOGH040SCS0010T04

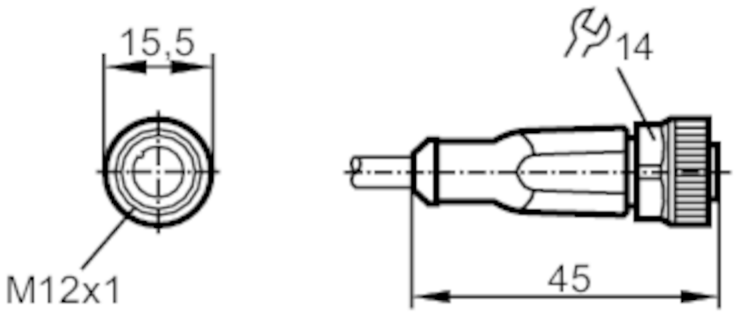

Application		
System		Free from silicone; Halogen-free; gold-plated contacts; Drag chain suitability
Application		welding applications
Free from silicone		yes
Electrical data		
Operating voltage	[V]	< 250 AC / < 300 DC
Protection class		II
Max. current load total	[A]	4
Operating conditions		
Ambient temperature	[°C]	-25...90
Note on ambient temperature		cULus: ...75
Ambient temperature (moving)	[°C]	-25...90
Note on ambient temperature (moving)		cULus: ...75
Protection		IP 65; IP 67; IP 68; IP 69K

EVW003

Female cordset

ADOGH040SCS0010T04

Mechanical data			
Weight	[g]	335.2	
Dimensions	[mm]	15.5 x 15.5 x 45	
Material		housing: TPU (urethane) orange; sealing: FKM	
Material nut		brass, weld coated	
Drag chain suitability		yes	
Drag chain suitability		Bending radius for flexible applications	min. 10 x cable diameter
		Travel speed	max. 3.3 m/s for a horizontal travel length of 5 m and max. acceleration of 5 m/s²
		Bending cycles	> 2 Mio.
		Torsional strain	± 180 °/m

Remarks	
Pack quantity	1 pcs.

Electrical connection

Cable: 10 m, PUR, Halogen-free, grey, Ø 4.9 mm; not irradiated (can be recycled); resistant to welding sparks; 4 x 0.34 mm² (42 x Ø 0.1 mm)

Electrical connection - Socket

Connector: 1 x M12, straight; Locking: brass, weld coated; Contacts: gold-plated; Tightening torque: 0.6...1.5 Nm

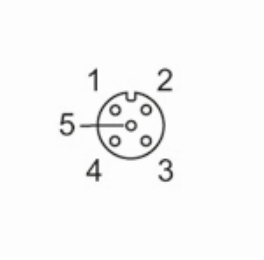

EVW003

Female cordset

ADOGH040SCS0010T04

Connection

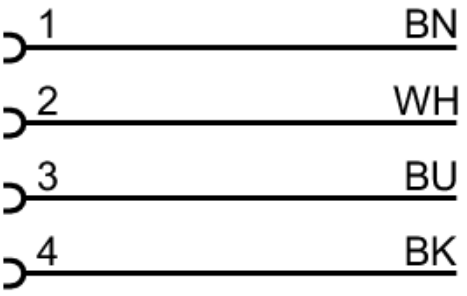

	Core colors :
BK =	black
BN =	brown
BU =	blue
WH =	white

Diagrams and graphs

Characteristic curve for derating

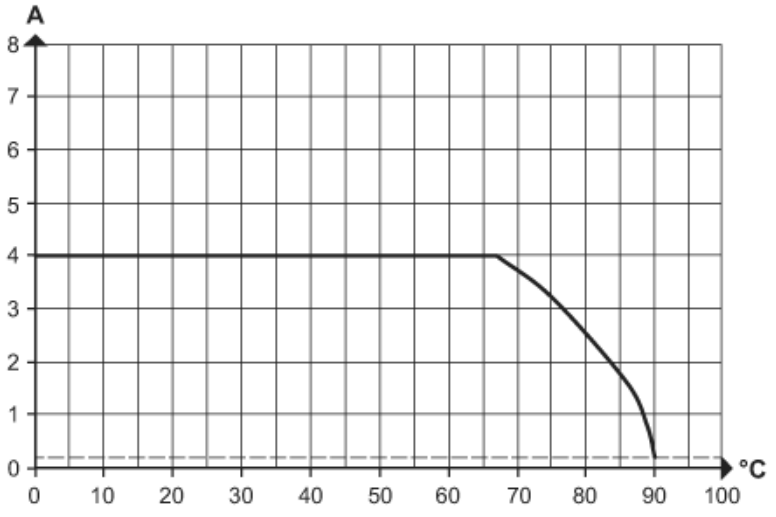

Derating Imax * 0.8 (DIN EN 60512-5-2)

X Ambient temperature [°C]

Y Current [A]